HMT-SERIES
MODULAR TORQUE WRENCHES

ONE DRIVE, TWO TOOLS

ENERPAC®

▼ HMT-Drive Units with interchangeable HLP-Low Profile Cassette and HSQ-Square Drive Cassette

Modular, Durable, Fast and Efficient Torque for Low Profile and Square Drive Applications

The HMT-Series is a range of fast, durable and efficient modular hydraulic torque wrenches, enabling you to tackle almost any bolting application. Interchange cassettes with ease, switching the HLP low profile hexagon cassette with the HSQ square drive whenever your application demands.

As an added benefit, tools and cassettes are interchangeable with many other well-known brands, allowing you the freedom to use the tools at your disposal whilst reducing the cost of upgrading your legacy torque wrench inventory to high quality Enerpac equipment.

The tool itself has been carefully designed and manufactured, utilising superior alloys and surface treatments to make it lightweight, up to 25% faster and more than twice as durable as other tools in the same class.

Safety and Performance

- **Supplied with an ergonomic tool safety handle as standard**
- **The HMT Modular Torque/Tool is also supplied with a link pin retainer as standard.**

Versatility

- **Interchangeable with other manufacturers**
- **HMT is able to solve all of your bolting challenges quickly and safely, with one or more attachment options, making it suitable for any application**

Simplicity

- **The HMT is part of a modular system which is made up of a single power head and one attachment; the HMT Drive Unit and HLP Hexagon cassette or HSQ Square Drive Cassette**

Accuracy

- **Accuracy of ±3%**

Torque Wrench Options and Accessories

Optional accessories are available for maximum versatility. Please contact your Enerpac representative to help you select the optimum solution for your application.

Page: 11

Back-Up Spanners

Hands free tool to be used to stop back nut from turning during make up or break out. Two hexagon sizes in one tool.

Page: 9

Torque Wrench Pumps

Visit enerpac.com for system matched air and electric torque wrench pumps that are ideal for use with hydraulic torque wrenches.

Page: 10

Torque Wrench Hoses

Use Enerpac THQ-700 Series hoses with HMT-Series torque wrenches to ensure the integrity of your hydraulic system.

6 feet long, 2 hoses	**THQ702T**
19.5 feet long, 2 hoses	**THQ706T**
39 feet long, 2 hoses	**THQ712T**

Drive Units for Hexagon & Square Drive Cassettes

One Drive, Two Tools

One HMT-Hydraulic Torque Wrench fits HLP-Low Profile or HSQ Square Drive cassette.

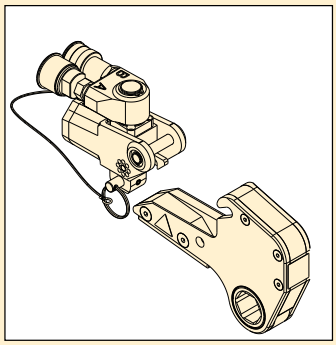

HMT...HLP

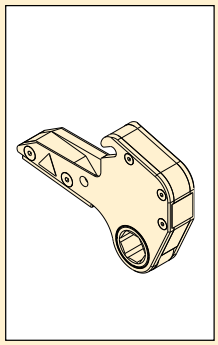

HLP

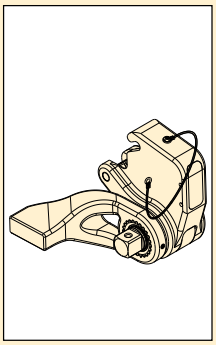

HSQ

HMT Series

Max. Torque at 10,000 psi:
1541 - 7562 Ft.lbs

Max. Torque at 690 bar:
2089 - 10.252 Nm

Hexagon Range:
1 1/16 - 3 15/16" / 26 - 100 mm

Maximum Operating Pressure:
10,000 psi / 690 bar

▼ **HMT-Torque Wrench Drive Unit shown with HLP-Low Profile Hexagon Cassette**

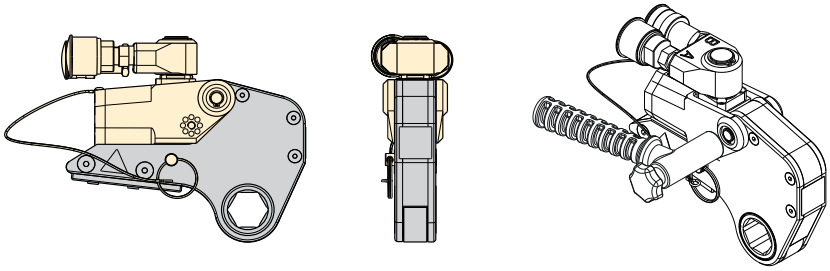

▼ **HMT-Torque Wrench Drive Unit shown with HSQ-Square Drive Cassette**

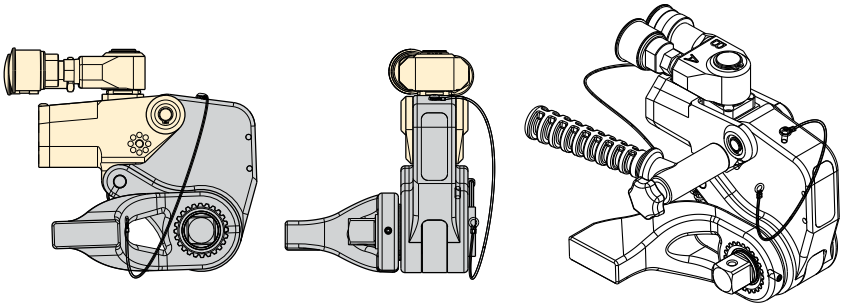

250%

Select the Right Torque

Choose your Enerpac Torque Wrench using the untightening rule of thumb: Loosening torque equals about 250% of tightening torque.

HLP Low -Profile Cassettes

For the metric and imperial Low Profile cassettes see:

Page: 4-8

HSQ Square Drive Cassettes

For the metric and imperial Square Drive Cassettes see:

Page: 6-7

▼ **SELECTION CHART**

Maximum Torque Output (ft-lbs)	Maximum Torque Output (Nm)	Drive Unit Model Number	Dimensions (in) A	Dimensions (in) B	Dimensions (in) C	Wt. (lbs)	Dimensions (mm) A	Dimensions (mm) B	Dimensions (mm) C	Wt. (kg)
1541	2089	**HMT1500**	4.3	4.1	2.0	2.20	108	104	49	1,0
3543	4804	**HMT3500**	5.7	5.2	2.6	3.97	146	132	66	1,8
7562	10.252	**HMT7500**	7.1	6.4	3.2	7.05	180	163	82	3,2

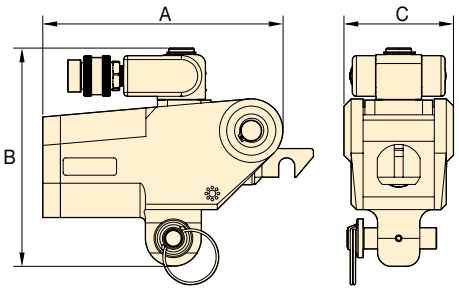

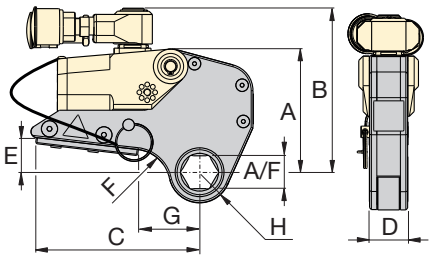

Hexagon Range:
1 1/16 - 3 15/16 inch.

Hexagon Range:
26 - 100 mm

Maximum Operating Pressure:
10,000 psi

HLP Series

▼ SELECTION CHART

Drive Unit Model Number	Hexagon Size (in)	Hexagon Size (mm)	Hexagon Cassette Model Number	Maximum Torque Output (ft-lbs)	Maximum Torque Output (Nm)	Dimensions (in) A	B	C	D	E	F	G	H	Wt. (lbs)	Dimensions (mm) A	B	C	D	E	F	G	H	Wt. (kg)
HMT1500	1 1/16	26	HLP1101	1541	2089	4.48	5.32	5.35	1.2	1.13	1.18	2.01	1.00	3.53	114	135	136	31,5	29	30	51	25	1,6
	1 1/8	-	HLP1102	1541	2089	4.48	5.32	5.35	1.2	1.13	1.18	2.01	1.00	3.53	114	135	136	31,5	29	30	51	25	1,6
	1 3/16	30	HLP1103	1541	2089	4.48	5.32	5.35	1.2	1.13	1.18	2.01	1.00	3.53	114	135	136	31,5	29	30	51	25	1,6
	1 1/4	32	HLP1104	1541	2089	4.48	5.32	5.35	1.2	1.13	0.95	2.01	1.08	3.53	114	135	136	31,5	29	24	51	27	1,6
	1 5/16	33	HLP1105	1541	2089	4.48	5.32	5.35	1.2	1.13	0.95	2.01	1.08	3.53	114	135	136	31,5	29	24	51	27	1,6
	1 3/8	35	HLP1106	1541	2089	4.48	5.32	5.35	1.2	1.13	0.55	1.89	1.19	3.53	114	135	136	31,5	29	14	48	30	1,6
	1 7/16	36	HLP1107	1541	2089	4.48	5.32	5.35	1.2	1.13	0.55	1.89	1.19	3.53	114	135	136	31,5	29	14	48	30	1,6
	1 1/2	38	HLP1108	1541	2089	4.48	5.32	5.35	1.2	1.13	0.55	2.01	1.30	3.53	114	135	136	31,5	29	14	51	33	1,6
	1 9/16	-	HLP1109	1541	2089	4.48	5.32	5.35	1.2	1.13	0.55	2.01	1.30	3.53	114	135	136	31,5	29	14	51	33	1,6
	1 5/8	41	HLP1110	1541	2089	4.48	5.32	5.35	1.2	1.13	0.55	2.01	1.30	3.53	114	135	136	31,5	29	14	51	33	1,6
	1 11/16	-	HLP1111	1541	2089	4.48	5.32	5.35	1.2	1.13	0.55	2.01	1.30	3.53	114	135	136	31,5	29	14	51	33	1,6
	1 3/4	-	HLP1112	1541	2089	4.48	5.32	5.35	1.2	1.13	0.55	2.01	1.38	3.53	114	135	136	31,5	29	14	51	35	1,6
	1 13/16	46	HLP1113	1541	2089	4.48	5.32	5.35	1.2	1.13	0.55	2.01	1.38	3.53	114	135	136	31,5	29	14	51	35	1,6
	1 7/8	-	HLP1114	1541	2089	4.48	5.32	5.35	1.2	1.13	0.55	2.36	1.52	3.53	114	135	136	31,5	29	14	60	39	1,6
	1 15/16	-	HLP1115	1541	2089	4.48	5.32	5.35	1.2	1.13	0.55	2.36	1.52	3.53	114	135	136	31,5	29	14	60	39	1,6
	2	50	HLP1200	1541	2089	4.48	5.32	5.35	1.2	1.13	0.55	2.36	1.52	3.75	114	135	136	31,5	29	14	60	39	1,7
	2 1/16	-	HLP1201	1541	2089	4.48	5.32	5.35	1.2	1.13	0.55	2.36	1.52	3.75	114	135	136	31,5	29	14	60	39	1,7
	2 1/8	-	HLP1202	1541	2089	4.48	5.32	5.35	1.2	1.13	0.55	2.36	1.65	3.75	114	135	136	31,5	29	14	60	42	1,7
	2 3/16	55	HLP1203	1541	2089	4.48	5.32	5.35	1.2	1.13	0.55	2.36	1.65	3.75	114	135	136	31,5	29	14	60	42	1,7
	2 1/4	-	HLP1204	1541	2089	4.48	5.32	5.35	1.2	1.13	0.55	2.36	1.65	3.75	114	135	136	31,5	29	14	60	42	1,7
	2 5/16	-	HLP1205	1541	2089	4.48	5.32	5.35	1.2	1.13	0.55	2.36	1.65	3.75	114	135	136	31,5	29	14	60	42	1,7
	2 3/8	60	HLP1206	1541	2089	4.48	5.32	5.35	1.2	1.13	0.55	2.36	1.71	3.75	114	135	136	31,5	29	14	60	44	1,7
	2 7/16	62	HLP1207	1541	2089	4.48	5.32	5.35	1.2	1.13	0.55	2.36	1.71	3.75	114	135	136	31,5	29	14	60	44	1,7
HMT3500	1 3/8	35	HLP3106	3543	4804	6.02	6.57	7.24	1.7	1.59	1.89	3.09	1.30	8.6	153	167	184	42	41	48	79	33	3,9
	1 7/16	36	HLP3107	3543	4804	6.02	6.57	7.24	1.7	1.59	1.89	3.09	1.30	8.6	153	167	184	42	41	48	79	33	3,9
	1 1/2	38	HLP3108	3543	4804	6.02	6.57	7.24	1.7	1.59	1.81	3.16	1.42	8.6	153	167	184	42	41	46	80	36	3,9
	1 9/16	-	HLP3109	3543	4804	6.02	6.57	7.24	1.7	1.59	1.81	3.16	1.42	8.6	153	167	184	42	41	46	80	36	3,9
	1 5/8	41	HLP3110	3543	4804	6.02	6.57	7.24	1.7	1.59	1.81	3.16	1.42	8.6	153	167	184	42	41	46	80	36	3,9
	1 11/16	-	HLP3111	3543	4804	6.02	6.57	7.24	1.7	1.59	1.81	3.16	1.42	8.6	153	167	184	42	41	46	80	36	3,9
	1 3/4	-	HLP3112	3543	4804	6.02	6.57	7.24	1.7	1.59	1.58	3.08	1.52	8.6	153	167	184	42	41	40	78	39	3,9
	1 13/16	46	HLP3113	3543	4804	6.02	6.57	7.24	1.7	1.59	1.58	3.08	1.52	8.6	153	167	184	42	41	40	78	39	3,9
	1 7/8	-	HLP3114	3543	4804	6.02	6.57	7.24	1.7	1.59	1.42	3.05	1.63	8.6	153	167	184	42	41	36	77	41	3,9
	1 15/16	-	HLP3115	3543	4804	6.02	6.57	7.24	1.7	1.59	1.42	3.05	1.63	8.6	153	167	184	42	41	36	77	41	3,9
	2	50	HLP3200	3543	4804	6.02	6.57	7.24	1.7	1.59	1.42	3.05	1.63	8.6	153	167	184	42	41	36	77	41	3,9
	2 1/16	-	HLP3201	3543	4804	6.02	6.57	7.24	1.7	1.59	1.42	3.05	1.63	8.82	153	167	184	42	41	36	77	41	4,0
	2 1/8	-	HLP3202	3543	4804	6.02	6.57	7.24	1.7	1.59	1.18	2.97	1.74	8.82	153	167	184	42	41	30	75	44	4,0
	2 3/16	55	HLP3203	3543	4804	6.02	6.57	7.24	1.7	1.59	1.18	2.97	1.74	8.82	153	167	184	42	41	30	75	44	4,0
	2 1/4	-	HLP3204	3543	4804	6.02	6.57	7.24	1.7	1.59	1.18	2.97	1.74	8.82	153	167	184	42	41	30	75	44	4,0
	2 5/16	-	HLP3205	3543	4804	6.02	6.57	7.24	1.7	1.59	0.63	2.68	1.85	9.04	153	167	184	42	41	16	68	47	4,1
	2 3/8	60	HLP3206	3543	4804	6.02	6.57	7.24	1.7	1.59	0.63	2.68	1.85	9.04	153	167	184	42	41	16	68	47	4,1

HLP-Series Hexagon Cassettes for HMT Drive Units

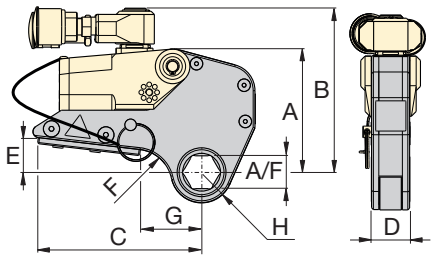

Hexagon Range:
1 1/16 - 3 15/16 inch.

Hexagon Range:
26 - 100 mm

Maximum Operating Pressure:
10,000 psi

HLP Series

▼ **SELECTION CHART**

Drive Unit Model Number	Hexagon Size (in)	Hexagon Size (mm)	Hexagon Cassette Model Number	Maximum Torque Output (ft-lbs)	Maximum Torque Output (Nm)	Dimensions (in) A	B	C	D	E	F	G	H	Wt. (lbs)	Dimensions (mm) A	B	C	D	E	F	G	H	Wt. (kg)
HMT3500	2 7/16	62	HLP3207	3543	4804	6.02	6.57	7.24	1.7	1.59	0.63	2.80	1.85	9.04	153	167	184	42	41	16	71	47	4,1
	2 1/2	63	HLP3208	3543	4804	6.02	6.57	7.24	1.7	1.59	0.63	2.80	1.96	9.04	153	167	184	42	41	16	71	50	4,1
	2 9/16	65	HLP3209	3543	4804	6.02	6.57	7.24	1.7	1.59	0.63	2.80	1.96	9.04	153	167	184	42	41	16	71	50	4,1
	2 5/8	-	HLP3210	3543	4804	6.02	6.57	7.24	1.7	1.59	0.63	2.80	2.07	9.04	153	167	184	42	41	16	71	53	4,1
	2 11/16	-	HLP3211	3543	4804	6.02	6.57	7.24	1.7	1.59	0.63	2.80	2.07	9.04	153	167	184	42	41	16	71	53	4,1
	2 3/4	70	HLP3212	3543	4804	6.02	6.57	7.24	1.7	1.59	0.63	2.80	2.07	9.04	153	167	184	42	41	16	71	53	4,1
	2 13/16	-	HLP3213	3543	4804	6.02	6.57	7.24	1.7	1.59	0.63	2.80	2.07	9.04	153	167	184	42	41	16	71	53	4,1
	2 7/8	-	HLP3214	3543	4804	6.02	6.57	7.24	1.7	1.59	0.63	2.80	2.07	9.04	153	167	184	42	41	16	71	53	4,1
	2 15/16	75	HLP3215	3543	4804	6.02	6.57	7.24	1.7	1.59	0.63	2.99	2.19	9.04	153	167	184	42	41	16	76	56	4,1
	3	-	HLP3300	3543	4804	6.02	6.57	7.24	1.7	1.59	0.63	2.99	2.19	9.04	153	167	184	42	41	16	76	56	4,1
	3 1/16	-	HLP3301	3543	4804	6.02	6.57	7.24	1.7	1.59	0.63	2.99	2.19	9.04	153	167	184	42	41	16	76	56	4,1
	3 1/8	80	HLP3302	3543	4804	6.02	6.57	7.24	1.7	1.59	0.63	2.99	2.19	9.04	153	167	184	42	41	16	76	56	4,1
HMT7500	2 3/16	55	HLP7203	7562	10252	7.60	8.01	8.94	2.1	1.81	1.65	3.39	1.91	15.65	193	203	227	52,6	46	42	86	49	7,1
	2 1/4	-	HLP7204	7562	10252	7.60	8.01	8.94	2.1	1.81	1.65	3.39	1.91	15.65	193	203	227	52,6	46	42	86	49	7,1
	2 5/16	-	HLP7205	7562	10252	7.60	8.01	8.94	2.1	1.81	1.65	3.39	1.91	15.65	193	203	227	52,6	46	42	86	49	7,1
	2 3/8	60	HLP7206	7562	10252	7.60	8.01	8.94	2.1	1.81	1.18	3.15	1.99	15.65	193	203	227	52,6	46	30	80	51	7,1
	2 7/16	62	HLP7207	7562	10252	7.60	8.01	8.94	2.1	1.81	1.18	3.15	1.99	15.65	193	203	227	52,6	46	30	80	51	7,1
	2 1/2	63	HLP7208	7562	10252	7.60	8.01	8.94	2.1	1.81	1.18	3.15	1.99	15.65	193	203	227	52,6	46	30	80	51	7,1
	2 9/16	65	HLP7209	7562	10252	7.60	8.01	8.94	2.1	1.81	0.87	3.15	2.07	15.65	193	203	227	52,6	46	22	80	53	7,1
	2 5/8	-	HLP7210	7562	10252	7.60	8.01	8.94	2.1	1.81	0.79	3.15	2.19	15.65	193	203	227	52,6	46	20	80	56	7,1
	2 11/16	-	HLP7211	7562	10252	7.60	8.01	8.94	2.1	1.81	0.79	3.15	2.19	15.65	193	203	227	52,6	46	20	80	56	7,1
	2 3/4	70	HLP7212	7562	10252	7.60	8.01	8.94	2.1	1.81	0.79	3.15	2.19	17.42	193	203	227	52,6	46	20	80	56	7,9
	2 13/16	-	HLP7213	7562	10252	7.60	8.01	8.94	2.1	1.81	0.79	3.15	2.19	17.42	193	203	227	52,6	46	20	80	56	7,9
	2 7/8	-	HLP7214	7562	10252	7.60	8.01	8.94	2.1	1.81	0.79	3.15	2.19	17.42	193	203	227	52,6	46	20	80	56	7,9
	2 15/16	75	HLP7215	7562	10252	7.60	8.01	8.94	2.1	1.81	0.67	3.15	2.26	17.42	193	203	227	52,6	46	17	80	58	7,9
	3	-	HLP7300	7562	10252	7.60	8.01	8.94	2.1	1.81	0.67	3.39	2.38	17.42	193	203	227	52,6	46	17	86	61	7,9
	3 1/16	-	HLP7301	7562	10252	7.60	8.01	8.94	2.1	1.81	0.67	3.39	2.38	17.42	193	203	227	52,6	46	17	86	61	7,9
	3 1/8	80	HLP7302	7562	10252	7.60	8.01	8.94	2.1	1.81	0.67	3.39	2.38	17.42	193	203	227	52,6	46	17	86	61	7,9
	3 1/4	-	HLP7304	7562	10252	7.60	8.01	8.94	2.1	1.81	0.67	3.39	2.52	17.42	193	203	227	52,6	46	17	86	64	7,9
	-	85	HLP7085M	7562	10252	7.60	8.01	8.94	2.1	1.81	0.67	3.39	2.52	17.42	193	203	227	52,6	46	17	86	64	7,9
	3 3/8	-	HLP7306	7562	10252	7.60	8.01	8.94	2.1	1.81	0.67	3.39	2.52	17.42	193	203	227	52,6	46	17	86	64	7,9
	3 7/16	-	HLP7307	7562	10252	7.60	8.01	8.94	2.1	1.81	0.67	3.50	2.52	17.64	193	203	227	52,6	46	17	89	64	8,0
	3 1/2	-	HLP7308	7562	10252	7.60	8.01	8.94	2.1	1.81	0.67	3.50	2.64	17.64	193	203	227	52,6	46	17	89	67	8,0
	-	90	HLP7090M	7562	10252	7.60	8.01	8.94	2.1	1.81	0.67	3.74	2.64	17.64	193	203	227	52,6	46	17	95	67	8,0
	3 9/16	-	HLP7309	7562	10252	7.60	8.01	8.94	2.1	1.81	0.67	3.74	2.78	17.64	193	203	227	52,6	46	17	95	71	8,0
	3 3/4	95	HLP7312	7562	10252	7.60	8.01	8.94	2.1	1.81	0.67	3.74	2.89	18.08	193	203	227	52,6	46	17	95	71	8.2
	3 7/8	-	HLP7314	7562	10252	7.60	8.01	8.94	2.1	1.81	0.67	3.74	2.89	18.08	193	203	227	52,6	46	17	95	74	8.2
	3 15/16	100	HLP7315	7562	10252	7.60	8.01	8.94	2.1	1.81	0.67	3.74	2.89	18.08	193	203	227	52,6	46	17	95	74	8,2

▼ HMT drive unit with HSQ square drive cassette

Modular, Durable, Fast and Efficient Torque for Low Profile and Square Drive Applications

Torque Wrench Options and Accessories

Optional accessories are available for maximum versatility. Please contact your Enerpac representative to help you select the optimum solution for your application.

Page: 11

Back-Up Spanners

Hands free tool to be used to stop back nut from turning during make up or break out. Two hexagon sizes in one tool.

Page: 9

Torque Wrench Hoses

Use Enerpac THQ-700 Series hoses with HMT-Series torque wrenches to ensure the integrity of your hydraulic system.

6 feet long, 2 hoses	**THQ702T**
19.5 feet long, 2 hoses	**THQ706T**
39 feet long, 2 hoses	**THQ712T**

Safety and Performance

- **Innovative design that completely encloses all moving parts and minimizes pinch points**
- **Supplied reaction arm as standard**
- **Fully adjustable 360 degree in-line reaction arm**
- **Fine tooth rachet prevents locking-on**

Simplicity

- **Simple robust design with just three moving parts for reduced maintenance**
- **Push button, quick release, reversible square drive**

Versatility

- **The reaction arm, positioned around the square drive instead of the back of the drive unit, provides you with the possibility to turn the drive unit away from an obstacle**

Accuracy

- **Accuracy of ±3%**

HSQ, Square Drive Hydraulic Torque Wrenches

TORQUE WRENCH SELECTION (based on socket size range)

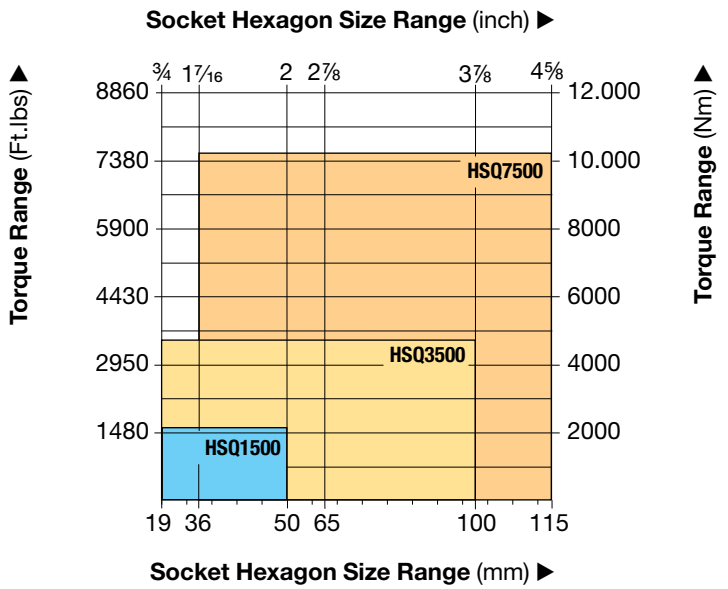

HMT Series

Maximum Torque at 10.000 psi:
1541 - 7562 Ft.lbs

Maximum Torque at 690 bar:
2089 - 10.252 Nm

Square Drive Range:
¾ - 1½ inch

Maximum Operating Pressure:
10.000 psi / 690 bar

BSH-Series Sockets

Heavy-Duty Impact Sockets for power driven torquing equipment.

Page: 8

Select the Right Torque

Choose your Enerpac Torque Wrench using the untightening rule of thumb: Loosening torque equals about 250% of tightening torque.

Torque Wrench Pumps

Visit enerpac.com for system matched air and electric torque wrench pumps that are ideal for use with hydraulic torque wrenches.

Page: 10

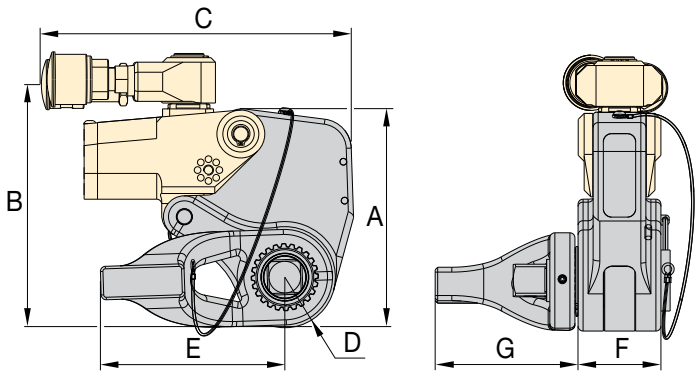

▼ **SELECTION CHART**

Max. Torque Output (ft-lbs)	Max. Torque Output (Nm)	Square Drive Size (in)	Sq. Drive Cassette Model Number*	Dimensions (in) A	B	C	D	E	F	G	Wt. (lbs)	Dimensions (mm) A	B	C	D	E	F	G	Wt. (kg)
1541	2089	¾	**HSQ1500**	5.71	6.61	6.85	1.19	2.36	1.95	3.29	8.16	145	168	174	30	60	50	84	3,7
3543	4804	**1**	**HSQ3500**	7.54	8.23	7.95	1.52	3.07	2.58	4.35	13.01	192	209	202	39	78	66	111	5,9
7562	10.252	**1½**	**HSQ7500**	9.60	10.08	9.25	1.99	4.33	3.23	6.32	25.13	244	256	235	51	110	82	161	11,4

*** IMPORTANT:** HMT-drive units must be ordered separately to operate the HSQ-Square Drive Cassettes.

ENERPAC

- **Heavy-duty impact sockets**
- **Supplied with "Pin and Ring"**

BSH Series

Hexagon Sizes:
¾ - 6⅛ in | 19 - 155 mm

METRIC SOCKETS							
3/4" Square Drive		1" Square Drive		1 1/2" Square Drive		2 1/2" Square Drive	
A/F (mm)	Model Number	A/F (mm)	Model Number	A/F (mm)	Model Number	A/F (mm)	Model Number
19	BSH7519	19	BSH1019	36	BSH1536	65	BSH2565
24	BSH7524	24	BSH1024	41	BSH15163	70	BSH2570
27	BSH7527	27	BSH1027	46	BSH1546	75	BSH2575
30	BSH7530	30	BSH1030	50	BSH1550	80	BSH2580
32	BSH7532	32	BSH1032	55	BSH1555	85	BSH2585
36	BSH7536	36	BSH1036	60	BSH1560	90	BSH2590
41	BSH75163	41	BSH10163	65	BSH1565	95	BSH2595
46	BSH7546	46	BSH1046	70	BSH1570	100	BSH25100
50	BSH7550	50	BSH1050	75	BSH1575	105	BSH25105
–	–	55	BSH1055	80	BSH1580	110	BSH25110
–	–	60	BSH1060	85	BSH1585	115	BSH25115
–	–	65	BSH1065	90	BSH1590	120	BSH25120
–	–	70	BSH1070	95	BSH1595	125	BSH25125
–	–	75	BSH1075	100	BSH15100	135	BSH25135
–	–	80	BSH1080	105	BSH15105	140	BSH25140
–	–	85	BSH1085	110	BSH15110	145	BSH25145
–	–	90	BSH1090	115	BSH15115	150	BSH25150
–	–	95	BSH1095	–	–	155	BSH25155
–	–	100	BSH10100	–	–	–	–

Select the Right Torque

250%

Choose your Enerpac Torque Wrench using the untightening rule of thumb: Loosening torque equals about 250% of tightening torque.

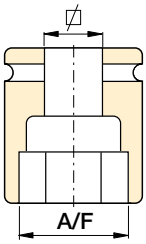

Hexagon Bolt and Nut Sizes

See the table of hexagon sizes of bolts, nuts and related thread diameters.

IMPERIAL SOCKETS													
3/4" Square Drive		1" Square Drive				1 1/2" Square Drive				2 1/2" Square Drive			
A/F (in)	Model Number	A/F (in)	Model Number	A/F (in)	Model Number	A/F (in)	Model Number	A/F (in)	Model Number	A/F (in)	Model Number	A/F (in)	Model Number
¾"	BSH7519	¾"	BSH1019	2 5/16"	BSH10231	1 7/16"	BSH15144	2 13/16"	BSH15281	2 7/16"	BSH25244	4 3/16"	BSH25419
⅞"	BSH75088	⅞"	BSH10088	2 3/8"	BSH10238	1 1/2"	BSH1538	2 7/8"	BSH15288	2 1/2"	BSH25250	4 1/4"	BSH25425
15/16"	BSH75094	15/16"	BSH10094	2 7/16"	BSH10244	1 9/16"	BSH15156	2 15/16"	BSH1575	2 9/16"	BSH2565	4 5/16"	BSH25110
1 1/16"	BSH7527	1 1/16"	BSH1027	2 1/2"	BSH10250	1 5/8"	BSH15163	3"	BSH15300	2 5/8"	BSH25263	4 3/8"	BSH25438
1 3/16"	BSH7530	1 3/16"	BSH1030	2 9/16"	BSH1065	1 11/16"	BSH1543	3 1/16"	BSH15306	2 11/16"	BSH25269	4 1/2"	BSH25450
1 1/4"	BSH75125	1 1/4"	BSH10125	2 5/8"	BSH10263	1 3/4"	BSH15175	3 1/8"	BSH15313	2 3/4"	BSH2570	4 5/8"	BSH25463
1 5/16"	BSH75131	1 5/16"	BSH10131	2 11/16"	BSH10269	1 13/16"	BSH1546	3 3/16"	BSH15319	2 13/16"	BSH25281	4 3/4"	BSH25475
1 3/8"	BSH7535	1 3/8"	BSH1035	2 3/4"	BSH1070	1 7/8"	BSH15188	3 1/4"	BSH15325	2 7/8"	BSH25288	4 7/8"	BSH25488
1 7/16"	BSH75144	1 7/16"	BSH10144	2 13/16"	BSH10281	1 15/16"	BSH15194	3 3/8"	BSH15338	2 15/16"	BSH2575	5"	BSH25500
1 1/2"	BSH7538	1 1/2"	BSH1038	2 7/8"	BSH10288	2"	BSH15200	3 1/2"	BSH15350	3"	BSH25300	5 1/8"	BSH25513
1 9/16"	BSH75156	1 9/16"	BSH10156	2 15/16	BSH1075	2 1/16"	BSH15206	3 5/8"	BSH15363	3 1/16"	BSH25306	5 3/16"	BSH25519
1 5/8"	BSH75163	1 5/8"	BSH10163	3"	BSH10300	2 1/8"	BSH15213	3 3/4"	BSH1595	3 1/8"	BSH25313	5 1/4"	BSH25525
1 11/16"	BSH7543	1 11/16"	BSH1043	3 1/16"	BSH10306	2 3/16"	BSH15219	3 7/8"	BSH15388	3 3/16"	BSH25319	5 3/8"	BSH25538
1 3/4"	BSH75175	1 3/4"	BSH10175	3 1/8"	BSH10313	2 1/4"	BSH15225	3 15/16"	BSH15100	3 1/4"	BSH25325	5 1/2"	BSH25140
1 13/16"	BSH7546	1 13/16"	BSH1046	3 3/16"	BSH10319	2 5/16"	BSH15231	4"	BSH15400	3 3/8"	BSH25338	5 3/4"	BSH25575
1 7/8"	BSH75188	1 7/8"	BSH10188	3 1/4"	BSH10325	2 3/8"	BSH15238	4 1/8"	BSH15105	3 1/2"	BSH25350	5 7/8"	BSH25150
1 15/16"	BSH75194	1 15/16"	BSH10194	3 3/8"	BSH10338	2 7/16"	BSH15244	4 3/16"	BSH15419	3 5/8"	BSH25363	6"	BSH25600
2"	BSH75200	2"	BSH10200	3 1/2"	BSH10350	2 1/2"	BSH15250	4 1/4"	BSH15425	3 3/4"	BSH2595	6 1/8"	BSH25613
–	–	2 1/16"	BSH10206	3 5/8"	BSH10363	2 9/16"	BSH1565	4 5/16"	BSH15110	3 7/8"	BSH25388	–	–
–	–	2 1/8"	BSH10213	3 3/4"	BSH1095	2 5/8"	BSH15263	4 3/8"	BSH15438	3 15/16"	BSH25100	–	–
–	–	2 3/16"	BSH10219	3 7/8"	BSH10388	2 11/16"	BSH15269	4 1/2"	BSH15450	4"	BSH25400	–	–
–	–	2 1/4"	BSH10225	–	–	2 3/4"	BSH1570	4 5/8"	BSH15463	4 1/8"	BSH25105	–	–

▼ **BUS03 Back-Up Spanner (safety cable not shown)**

BUS
Series

Hexagon Sizes (A/F):
1 1/16 - 4 15/16 inch

Hexagon Sizes (A/F):
27 - 120 mm

Back-Up Spanners

Hands free operation of a hydraulic torque wrench improves the safety of the operator significantly.

Enerpac Back-Up Spanners are a hands-free tool that eliminates the need to use a flogging spanner as a backing tool.

The Back-Up Spanners have been specifically designed to prevent them from locking onto the nut during bolt torqueing operations. They fit easily onto the back nut and prevent it from turning during make up or break out of bolted joints.

- **Hands free solution – improves operator safety**
- **Eliminates the need for flogging spanners**
- **Speeds up the bolting process**
- **Includes safety cable with quick-connect carabiner's, stainless steel tethers and secure Allen-key fixings**
- **Won't lock on during operations**
- **Spark free**
- **Two hexagon sizes in one tool**

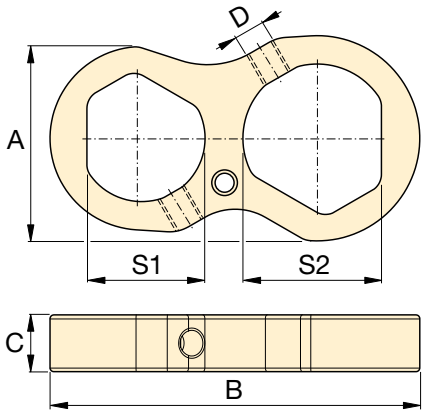

▼ **SELECTION CHART BACK-UP SPANNERS**

Hexagon Sizes (A/F)		Model Number	Dimensions (in)				Wt.
S1 to S2 (in)	S1 to S2 (mm)		A	B	C	D	(lb)
1 1/16 - 1 1/4"	27 - 32	**BUS 01**	2.0	3.9	0.6	M8	0.7
1 7/16 - 1 5/8"	36 - 41	**BUS 02**	2.4	4.7	0.6	M8	0.9
1 13/16 - 2"	46 - 50	**BUS 03**	3.0	5.6	0.8	M8	1.3
2 3/16 - 2 3/8"	55 - 60	**BUS 04**	3.5	6.5	0.8	M12	1.8
2 9/16 - 2 3/4"	65 - 70	**BUS 05**	3.9	7.5	1.0	M16	2.2
2 15/16 - 3 1/8"	75 - 80	**BUS 06**	4.4	8.4	1.0	M16	2.9
3 1/2 - 3 7/8"	–	**BUS 07**	5.3	10.1	1.2	M20	4.9
4 1/4 - 4 5/8"	–	**BUS 08**	6.4	12.2	1.2	M20	7.3
-	85 - 90	**BUS 09**	5.0	9.5	1.0	M16	3.7
3 3/4 - 3 15/16"	95 - 100	**BUS 10**	5.4	10.5	1.2	M20	5.1
4 1/8 - 4 15/16"	105 - 110	**BUS 11**	6.0	11.7	1.2	M20	6.8
-	115 - 120	**BUS 12**	6.5	12.6	1.2	M20	7.7

▼ *Enerpac Back-Up Spanners to be used to stop back nut from turning during make up or break out.*

Optimum Wrench-Pump Combinations

ENERPAC

For optimum speed and performance Enerpac recommends the following system set-up with wrench-pump-hose combinations. For other combinations, consult your Enerpac bolting expert or your authorized Enerpac distributor.

	ELECTRIC PUMPS					AIR DRIVEN PUMPS	
	XC-Series	E-Pulse™ E-Series	TQ-Series	ZU4-Series	ZE-Series	LAT-Series	ZA4-Series
Speed:							
Oil Flow at 10,000 psi:	15 in^3/min	32 in^3/min	30 in^3/min	60 in^3/min	60-120 in^3/min	60 in^3/min	60 in^3/min
Reservoir Capacity:	.5 gallon	.79 gallon	1 gallon	1.8 gal.	1.2 - 10.3 gal.	1.2 - 1.8 gal.	1.2 - 1.8 gal.
Duty Cycle:	Intermittent	Heavy-Duty	Standard	Standard	Heavy-Duty	Standard	Heavy-Duty
Weight:							
Field/Factory Work:	Field	Field/Factory	Field/Factory	Field	Factory	Field	Field
S1500X	Optimal	Optimal	Optimal	Optimal	Optimal	Optimal	Optimal
S3000X							
S6000X	–	Acceptable	Acceptable			Acceptable	
S11000X							
S25000X							
W2000X	Optimal	Optimal	Optimal			Optimal	
W4000X							
W8000X	–	Acceptable	Acceptable			Acceptable	
W15000X							
W22000X							
W35000X							
RSL1500	Optimal	Optimal	Optimal	Optimal	Optimal	Optimal	Optimal
RSL3000							
RSL5000							
RSL8000	–	Acceptable	Acceptable			Acceptable	
RSL11000							
RSL19000							
RSL28000							
DSX1500	Optimal	Optimal	Optimal	Optimal	Optimal	Optimal	Optimal
DSX3000							
DSX5000	–	Acceptable	Acceptable			Acceptable	
DSX11000							
DSX25000							
HMT1500	Optimal	Optimal	Optimal	Optimal	Optimal	Optimal	Optimal
HMT3500							
HMT7500	Acceptable						

XC-Series, Portable Cordless Pumps
The XC battery torque wrench pump is ideal for maintenance bolting applications at sites that do not have access to power or where having extension cords or air hoses could cause trip hazards.

E-Series, E-Pulse Electric Torque Wrench Pumps
Ideal for high volume fastening applications where weight is critical. Feature an interactive pendant for operation, programming and diagnostics.

TQ-700 Series, Electric Torque Wrench Pumps
Designed for both portability and production, to deliver superior bolting speed.

ZU4T-Series, Electric Torque Wrench Pumps
Works well with long extension cords or generator driven electrical power supplies. Available in **Pro** and **Classic** formats.

ZU4T Pro Pumps have an LCD feature to display torque or pressure, selectable torque wrench, and self-diagnostics.

ZU4T Classic Pumps feature an analogue gauge and a basic electrical package to deliver durable, safe and efficient hydraulic power.

ZE-Series, Electric Torque Wrench Pumps
Features LCD to display torque or pressure values, and self-diagnostics. With induction motor, making the ZE-Series the coolest and quietest pumps in their class.

LAT-Series Lightweight Torque Air Pumps
Combines compact design and high productivity for bolting applications in areas hard to access with larger air powered pumps.

ZA4T-Series, Air Driven Torque Wrench Pumps
This air driven pump is best suited to power medium to large size torque wrenches.

THQ-Series, Torque Wrench Hoses
Use Enerpac THQ-700-Series twin hoses with all torque wrenches to ensure the integrity of your hydraulic system.

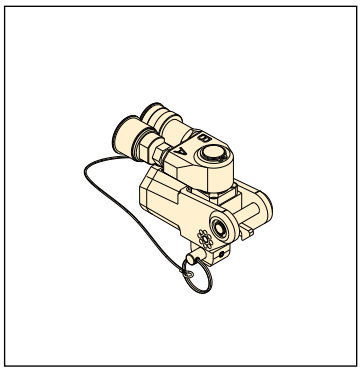

HMT

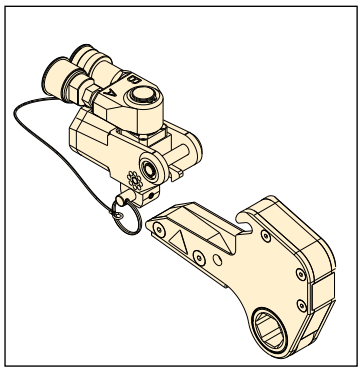

HMT...HLP

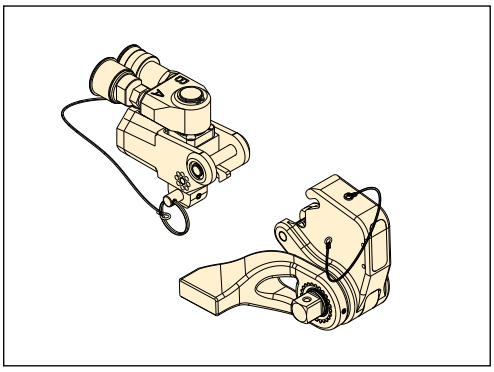

HMT...HSQ

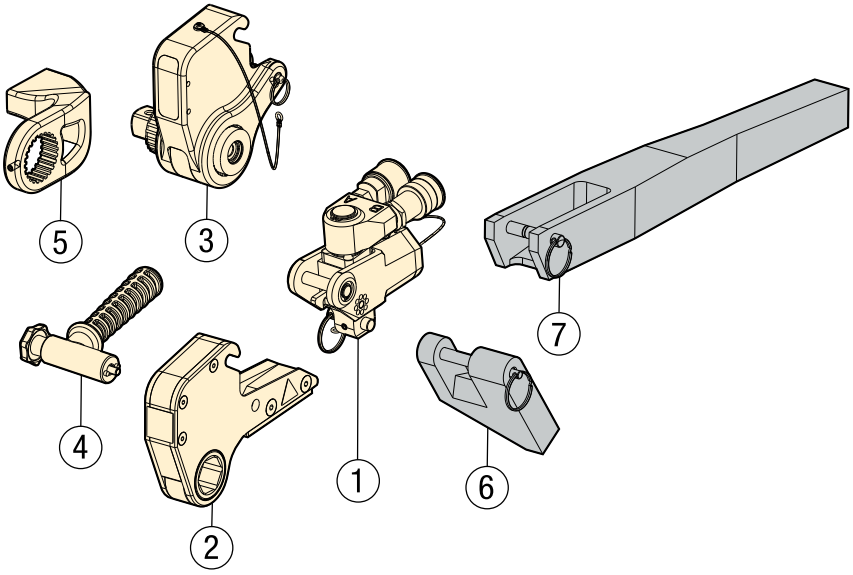

① Drive Unit (HMT)
② Hexagon Cassette (HLP)
③ Square Drive Cassette (HSQ)
④ Ergonomic Tool Handle
⑤ Reaction Arm for Square Drive Cassette

Optional Parts (only available per request)

⑥ Reaction Paddle
⑦ Extended Reaction Arm

Enerpac Online Bolting Calculator (Bolting Integrity Software)

Bolting Integrity Software

Visit enerpac.com to access our free on-line bolting sofware application.

A comprehensive on-line software solution for Bolted Joint integrity.

Integral databases hold data for:

- BS1560, MSS SP44, API 6A and 17D flanged joints
- Common gasket materials and configurations
- Comprehensive range of bolt materials
- Comprehensive range of lubricants
- Enerpac's Controlled Bolting Equipment including: Torque Multipliers, Hydraulic Wrenches and Bolt Tensioning tools

Custom Joint information can also be entered.

The software offers Tool selection, Bolt Load calculations and Tool pressure settings, as well as, a combined Application data sheet and Joint completion report.

www.enerpac.com

THE RIGHT TOOL MAKES ALL THE DIFFERENCE

Enerpac bolting tools are put to work under the most intense and demanding conditions. That's why we never compromise! So you can rely on quality and precision every time for your controlled tightening and joint integrity applications

As a global market leader in high-pressure hydraulic tools, controlled force products and solutions for the precision positioning of heavy loads, Enerpac products have moved and maintained some of the largest structures on earth. They are the industry standard in aerospace, infrastructure, manufacturing, mining, oil & gas, power generation and much more.

ELITE TOOLS. FOR ELITE PROFESSIONALS.

Controlled Tightening and Loosening

S-, W-, RSL-, DSX-, RSL- and HMT-Series Hydraulic Torque Wrenches

STTL-Series Safe T™ Torque Lock

Manual Torque Multipliers

Pneumatic and Electric Torque Wrenches

Cordless Torque Pumps

Electric Torque Pumps

Pneumatic Torque Pumps

Tensioning Tools

Power Generation Bolt Tensioners

HydraMax, General Purpose and Aquajack® Subsea Tensioners

Electric Tensioning Pumps

Pneumatic Tensioning Pumps

High-Pressure Hand Pumps

Joint Assembly & Joint Separation

Hydraulic Nut Cutters and Nut Splitters

Flange Alignment Tools

Mechanical Flange Face Tool

Step-Type Flange Spreaders

Valve Change-Out Tool Sets

Flange Puller Sets

ENERPAC

Enerpac Worldwide Locations
For a complete list of addresses see: **www.enerpac.com/en/enerpac-locations**
User Inquiries: 800-433-2766 Distributor Inquiries: 800-558-0530

www.enerpac.com

770_03-030152520_EN-US © 2020 Enerpac - Subject to change without notice.